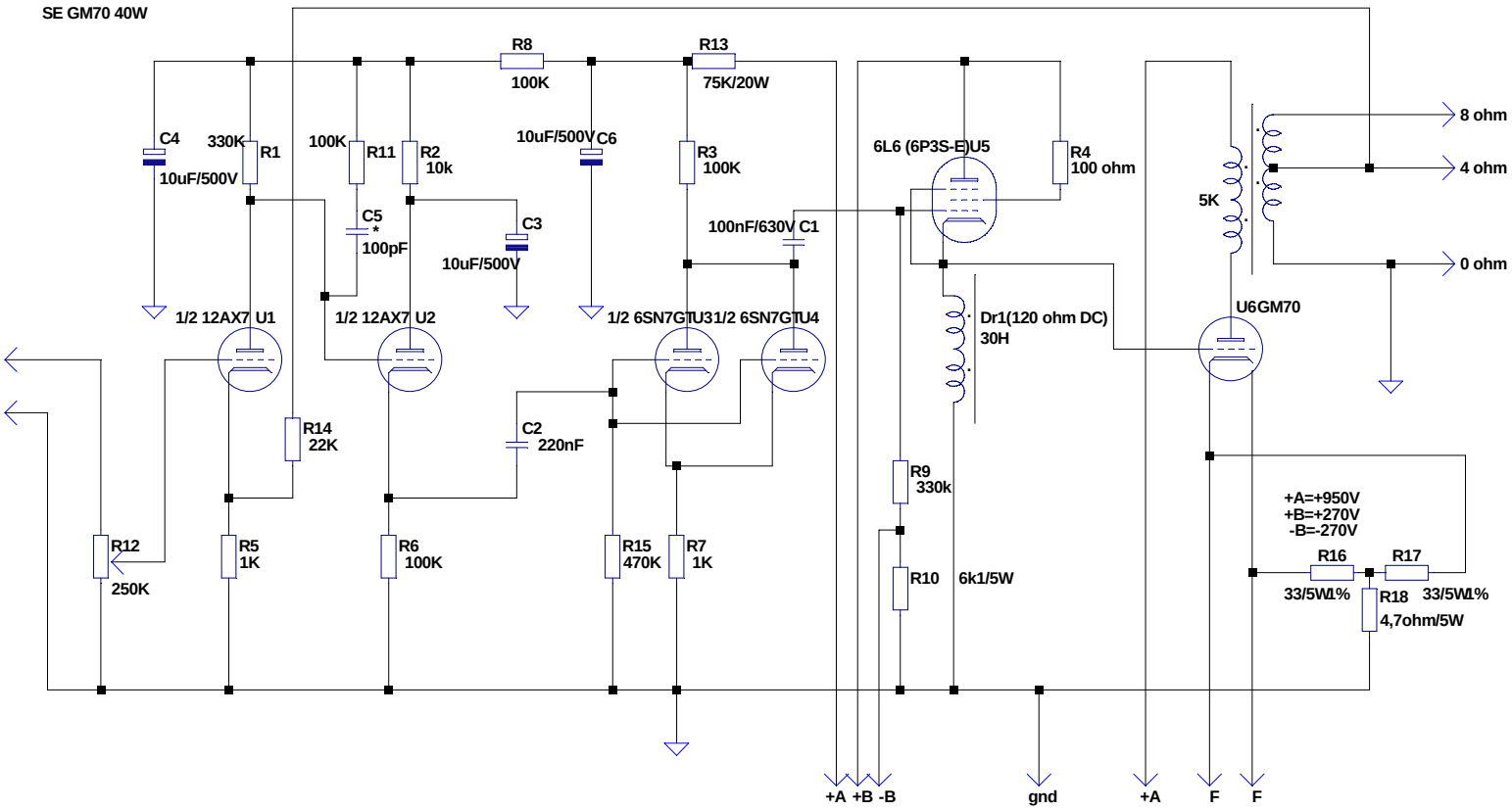

--- F:\EU\SCHEME ORIGINALE\GM70 SE 40W.asc ---